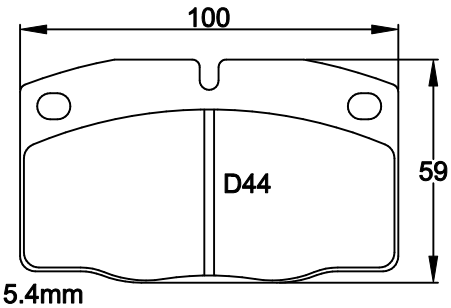

9521 = 15.4mm

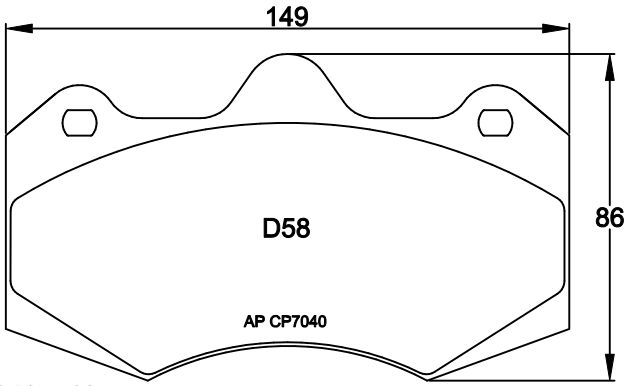

20346 = 16.7mm

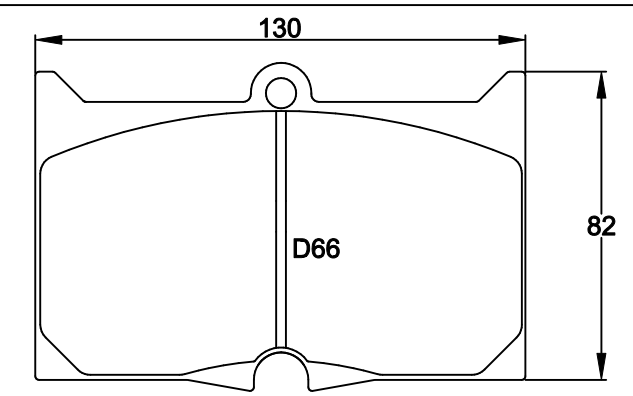

ERS371 = 25mm Porsche 935 Moby Dick

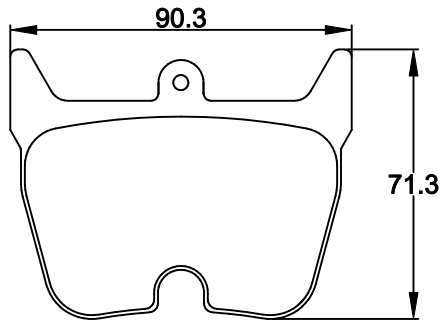

ERS650 = 22mm (set of 8 pcs.) Porsche 962

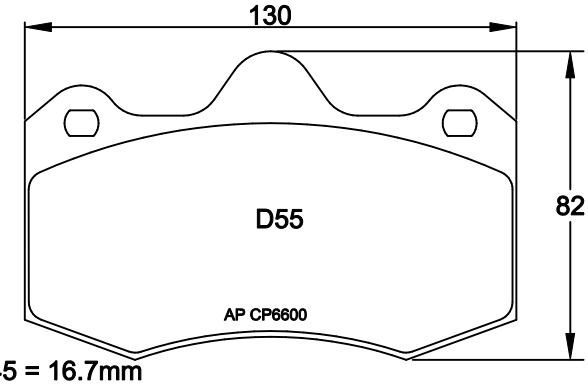

20345 = 16.7mm

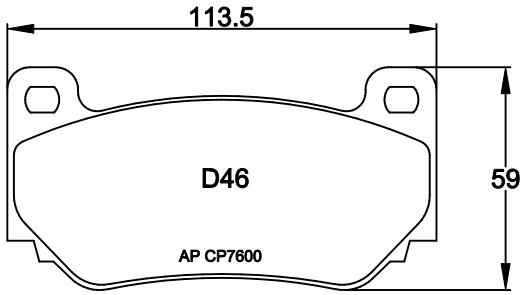

20349 = 16mm

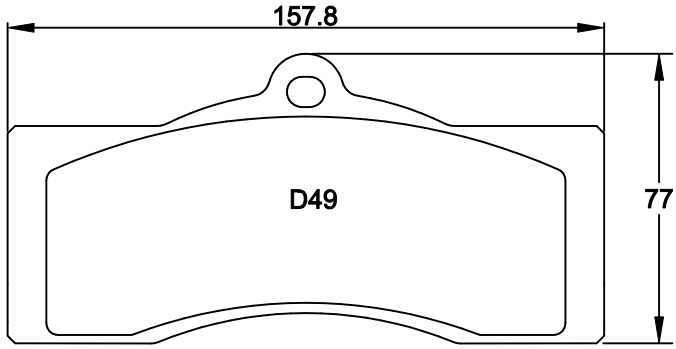

ERS485 = 14mm

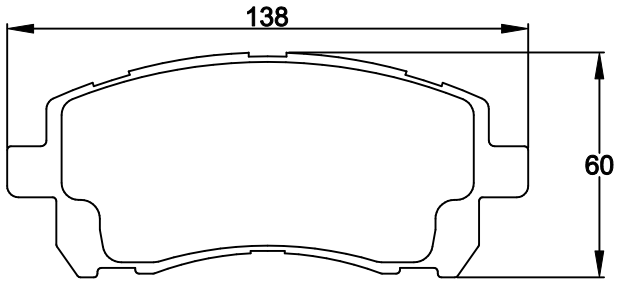

ERS651 = 16mm US Subaru WRX

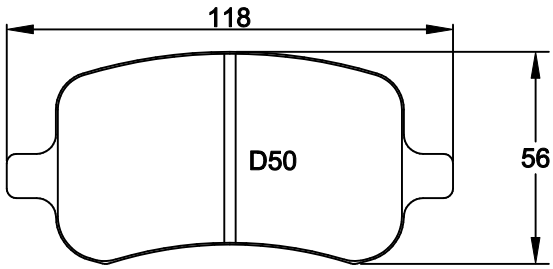

FRS139 = 19.5mm Chevrolet Cobalt, Pontiac Solstice

Illustrations are for identification purpose only. The right of modification in construction, design or model application is reserved.
Even if shown in the drawing, accessories such as clips, springs, rivets, wear indicators, damping shims etc. are generally not part of PAGID RS pads.