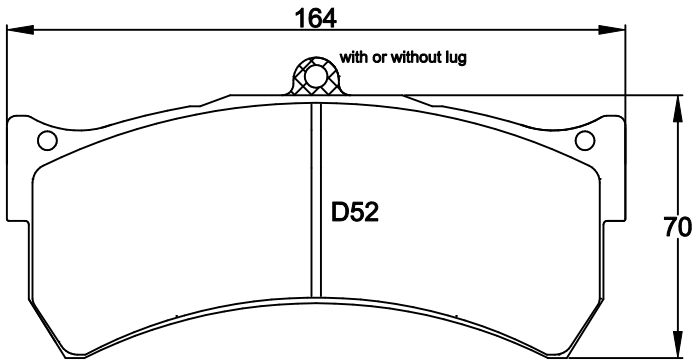

2488 = 29mm 2687 = 20mm 8038 = 22mm

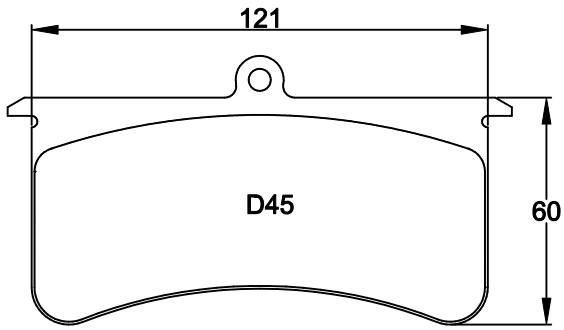

2555 = 20mm

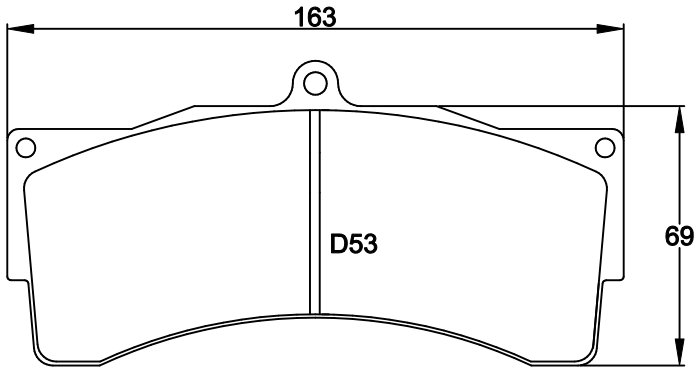

2557 = 29mm 2688 = 26.5mm ERS412 = 20mm

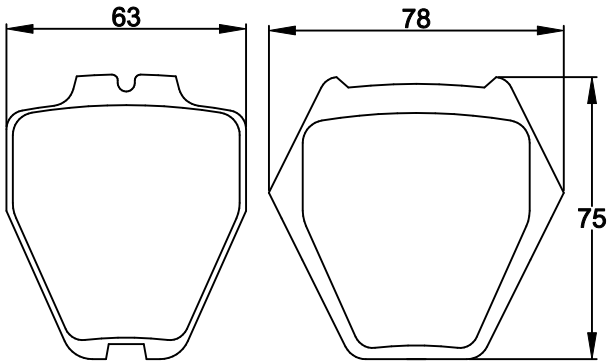

2562 = 17.5mm

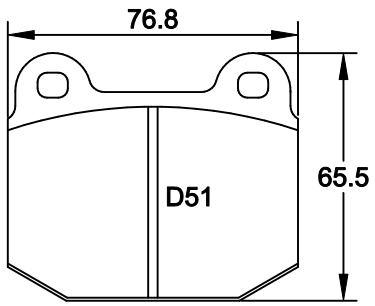

2593 = 14.6mm
4507 = 16.5mm

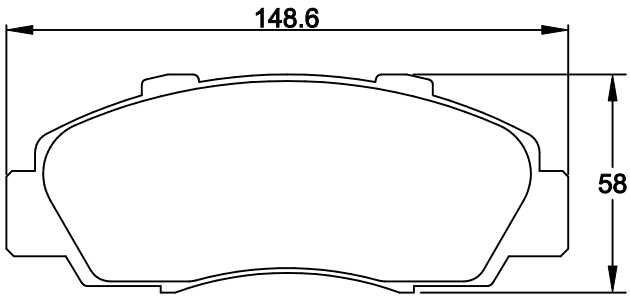

2623 = 17.3mm

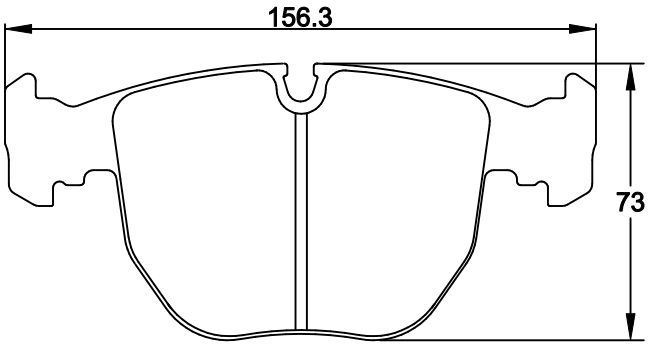

2683 = 19mm (sport pad T1136)

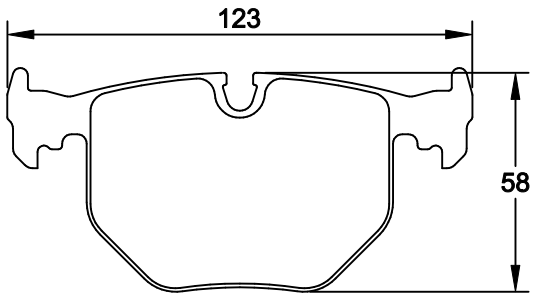

2685 = 17mm (sport pad T1117)

2687 see 2488

2688 see 2557

2703 see 1842

2704 see 1595

Illustrations are for identification purpose only. The right of modification in construction, design or model application is reserved.
Even if shown in the drawing, accessories such as clips, springs, rivets, wear indicators, damping shims etc. are generally not part of PAGID RS pads.